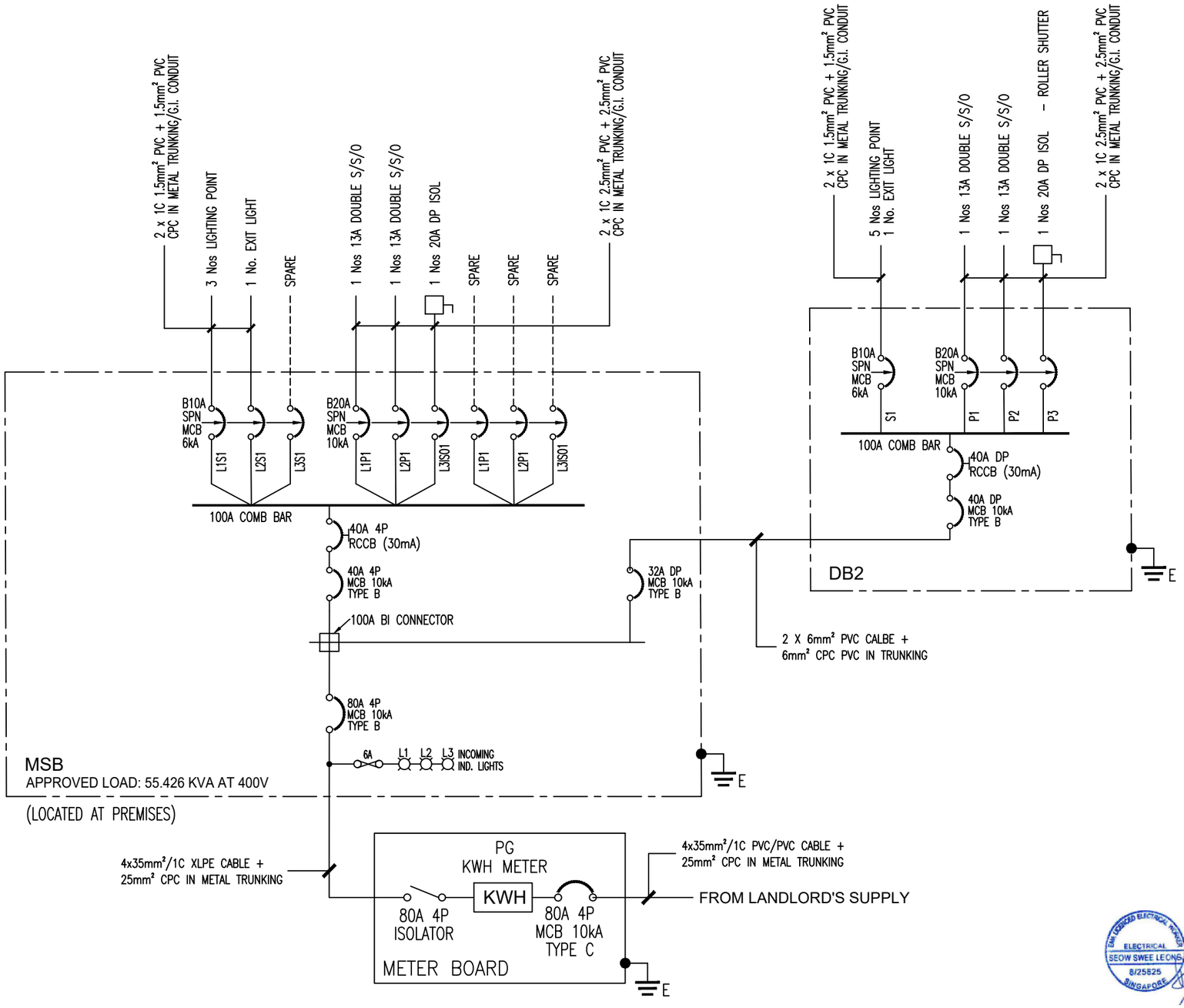

CLIENT / ADDRESS :	MAIN CONTRACTOR :	ELECTRICAL CONTRACTOR :	DRAWING TITLE :	LEW :	CHECKED :	DATE :
CEDAR VEDAR PTE LTD 7 #06-11 GAMBAS CRESCENT ARK @ GAMBAS SINGAPORE 757087			SINGLE LINE DIAGRAM (SLD)	SEOW SWEE LEONG EMA Licence No. : 8/25825	Ryan	25 FEB 2025
					DRAWING NO. : I2R-CED-GAM-SLD	REV : 0